MLP-12I (WQP12-9368) EXPLODED VIEW

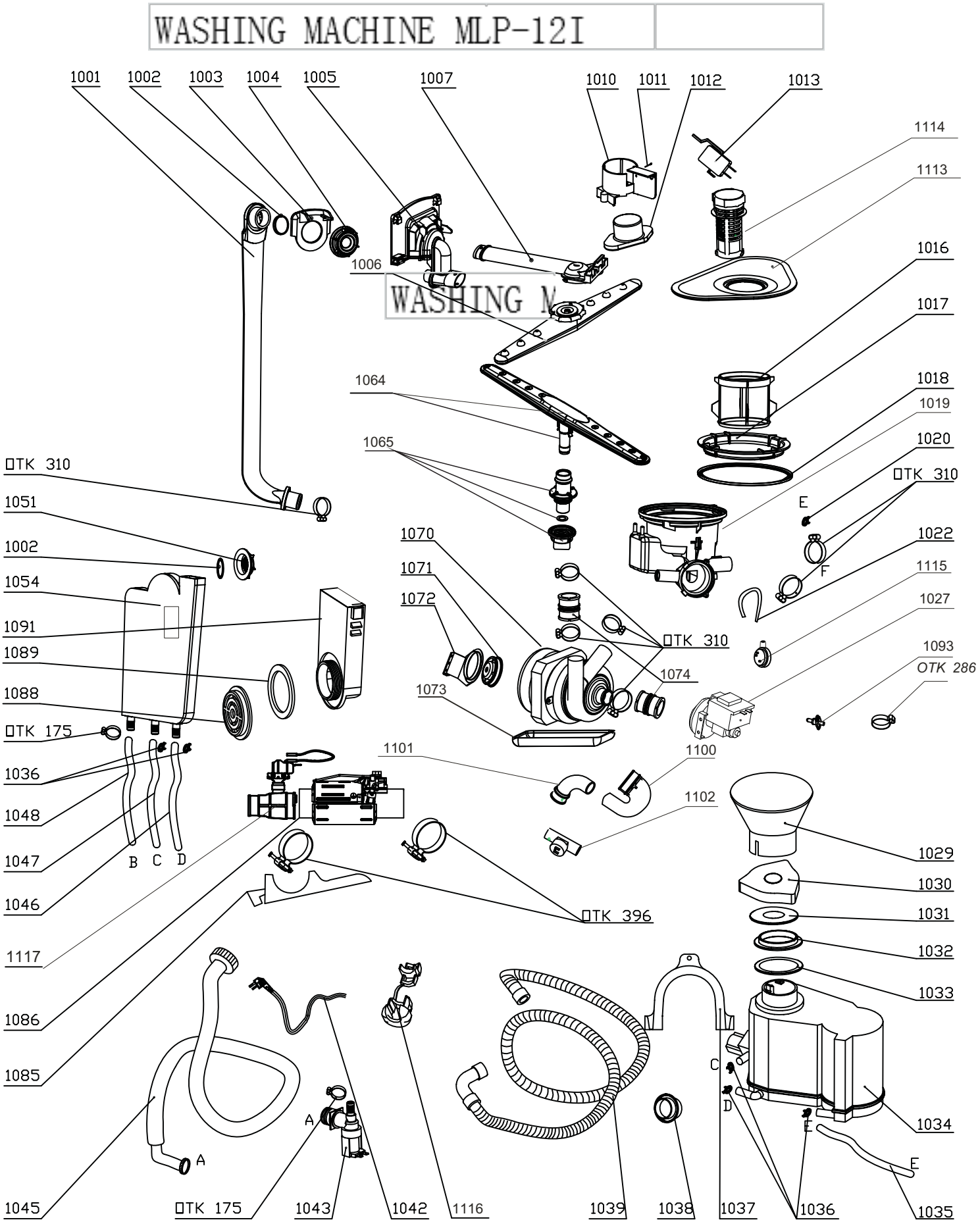

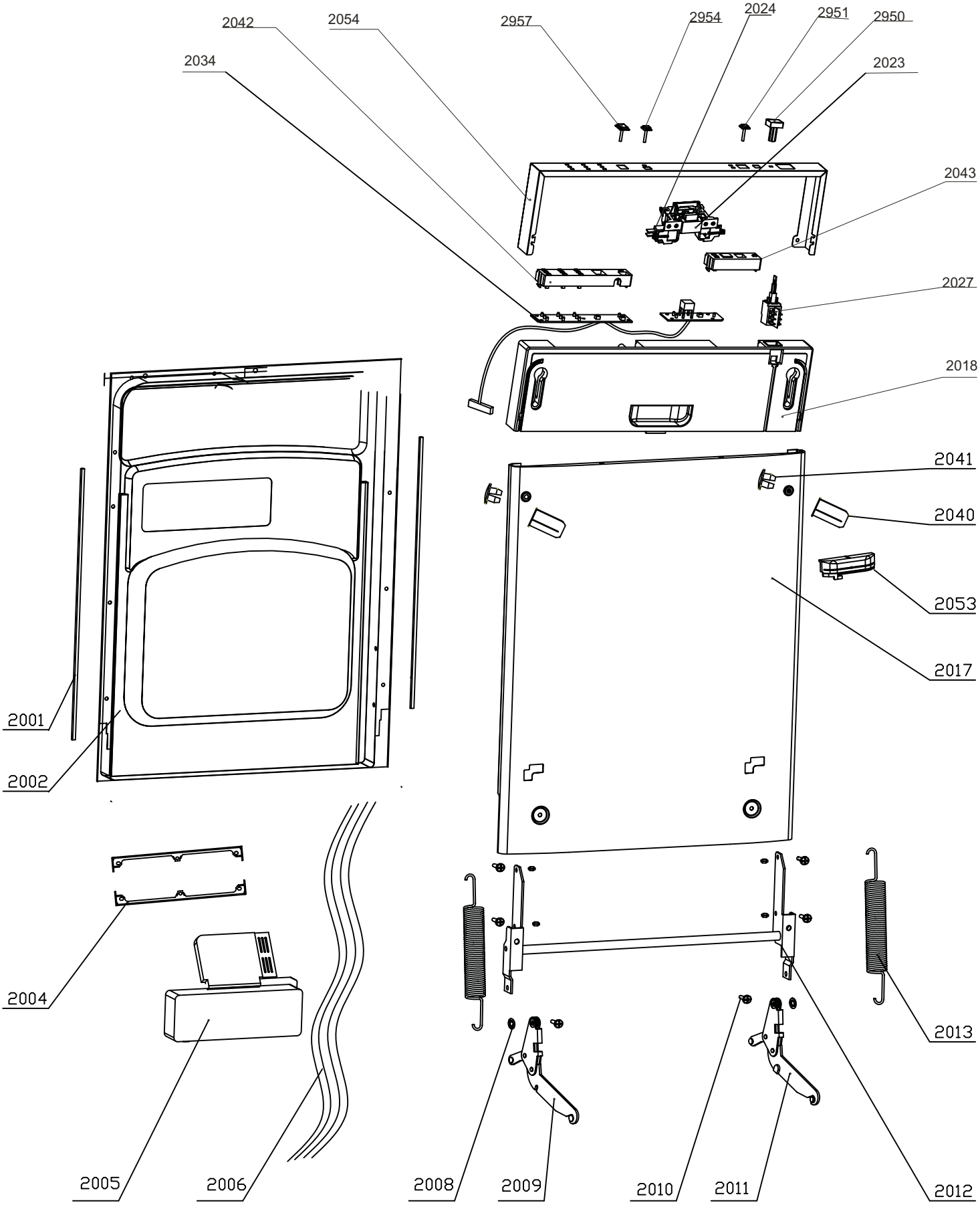
2042
2054
2957
2954
2024
2951
2950
2034
2023
2043
2027
2018
2041
2040
2053
2017
2001
2002
2004
2005
2006
2008
2009
2010
2011
2012
2013

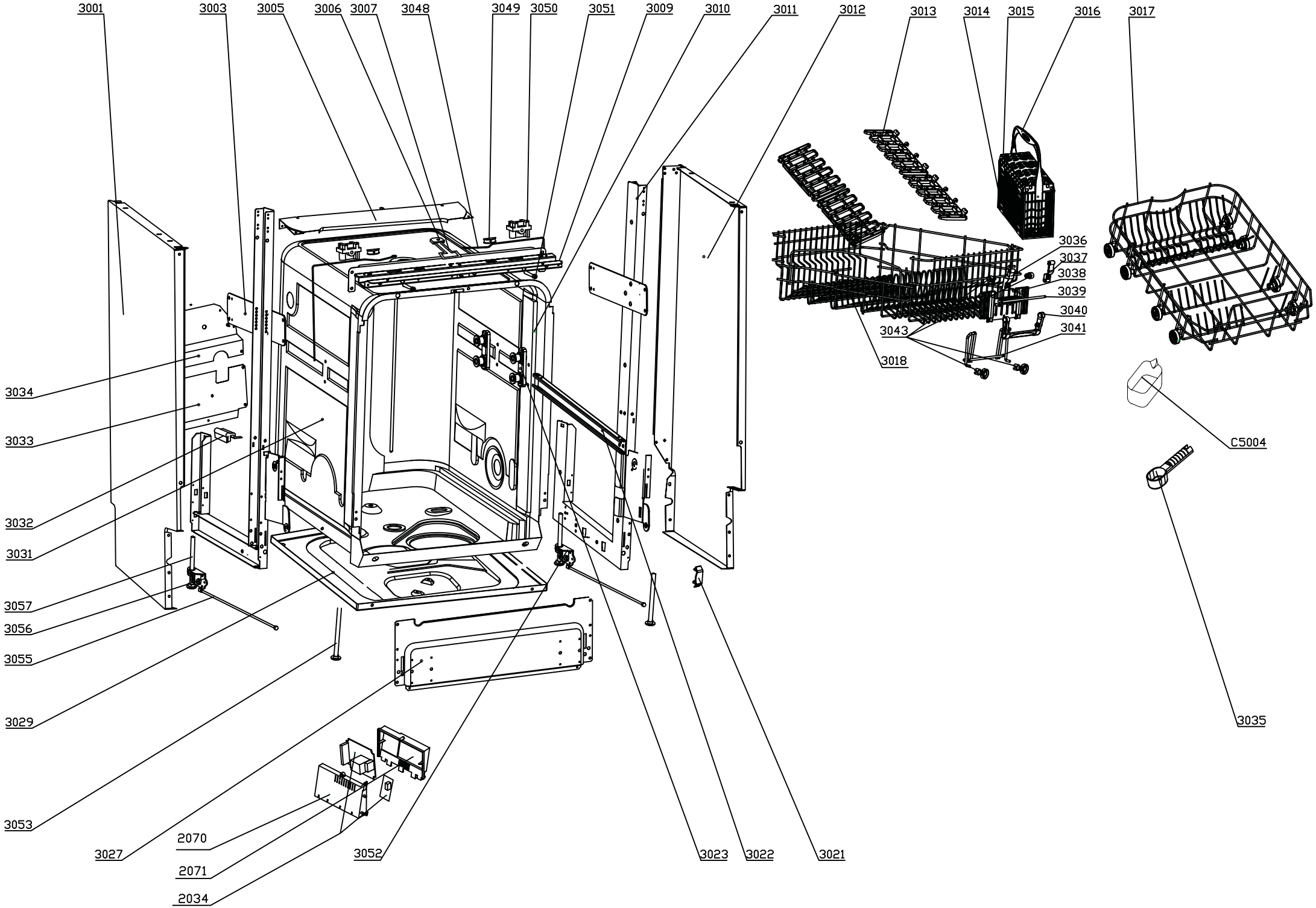
3001
3003
3005
3006
3007
3048
3049
3050
3051
3009
3010
3011
3012
3013
3014
3015
3016
3017
3036
3037
3038
3039
3040
3041
3043
3018
C5004
3035
3034
3033
3032
3031
3057
3056
3055
3029
3053
3027
2070
2071
2034
3052
3023
3022
3021

WASHING MACHINE MLP-08I

in	No in EV	code	item	Qty
	1001	673000900249	External pipe	1
	1002	673001500005	O Ring I 31.5X3.55	2
	1003	673001800364	Guide casing	1
	1004	673001600021	External pipe nut	1
	1005	673001900016	Water dispenser	1
	1006	673000300077	Upper sprayer	1
	1007	673000900195	Upper sprayer pipe	1
	1012	673002300003	Float	1
	1016	673002500047	Micro filter	1
	1017	673001600022	Sump nut	1
	1018	673001500016	Sump gasket	1
	1019	673000700081	Sump	1
	1020	672000700028	Clamp 12.7×1.8	1
	1022	673000900160	PVC hose	1
	1027	674000600106	Drain pump	1
	1029	673002200043	Salt filler	1
	1030	673002800050	Softener cover assembly	1
	1031	673001700080	Softener cover gasket	1
	1032	673001600039	Softener nut	1
	1033	673001700001	Softener gasket	1
	1034	674000700022	Softener	1
	1036	672000700029	Clamp 14.5×1.8	3
	1037	673006200027	Drain hose hook	1
	1038	673001500002	Drain hose holder	1
	1039	673000900186	Drain hose	1
	1042	674000000198	Power cord	1
	1043	674000200012	Inlet valve	1
	1045	673000900093	Inlet hose assembly	1
	1046	673000900026	Regeneration hose	1
	1048	673000900024	Inlet hose of air breather	1
	1051	673001600055	Air breather nut	1
	1054	673002700008	Air breather assembly	1
	1064	670400051618	Lower sprayer	1
	1065	673001200027	Lower sprayer connection assembly	1
	1070	674000600041	Washing pump	1
	1073	673002400066	Motor insulation pan	1
	1074	673000900182	Connect hose	2
	1085	673001400025	Heating element support	1
	1086	674001100039	Heating elements	1
	1088	673001600024	Water inlet nut	1
	1089	673001500019	Water inlet gasket	1
	1091	673002600035	Water inlet	1
	1093	674000900038	Sensing device	1
	1100	673000900111	Bend connect hose A	1
	1101	673000900112	Bend connect hose B	1
	1102	674001010008	turbidity sensor	1
	1113	673002500048	plane filter	1
	1114	673001300137	Scran collection	1
	1115	674000300079	Pressure switch	1
	1116	673001400083	power cord clasper	1
	1117	674000302006	pressure switch assembly for heating el	1
	2001	673002000084	Door edge guard piece	2
	2002	672002200137	Inner door	1
	2004	672001700002	Dispenser bracket	2
	2005	674000800032	Dispenser	1
	2006	674000100493	Wiring harness	1
	2008	672000500006	Ring Φ6	4
	2009	672001300029	Left hinge	1
	2010	672001200012	Dowel	2
	2011	672001300030	Right hinge	1
	2012	672001300023	Door gemel assembly	1
	2013	672000100004	Door spring	2
	2017	672001800552	Outer door	1
	2018	673000401806	Front panel	1
	2023	673001800513	Handle assembly	1
	2024	674010030000	door switch	1
	2027	674010010000	Power switch	1
	2034	674001020224	Control board	1
	2040	673001800365	Screw sleeve	2
	2041	673000700005	Sleeve cover	2
	2042	673002400044	Lampshade A	1
	2043	673002400045	Lampshade B	1
	2053	673002800031	Control panel cover	1
	2054	672000310033	Delay key-press	1
	2070	673002400187	Circuit board box A	1
	2071	673002400100	Circuit board box B	1
	2950	673000800812	power button	1
	2951	673000801572	Program selection key-press	1
	2954	673000801576	Delay key-press	1
	2957	673000801579	Half loading key-press	1
	3001	672001600212	Left side panel	1
	3003	672002100067	Upright left assembly	1
	3005	672001500003	Upper rear crosspiece	1
	3006	673001300061	door clamp	1
	3007	672001400039	door lock	1
	3009	672001500247	Upper front crosspiece	1
	3010	673001700078	Tank gasket	1
	3011	672002100066	Upright right assembly	1
	3012	672001600211	Right panel	1
	3013	673001300072	Upper basket cup holder	4
	3017	672000800342	Lower basket	1
	3018	672000800406	Upper basket	1
	3021	673001300044	Rail block	2
	3022	672001700005	Rail	1
	3023	673001400056	Rail support assembly	4
	3027	672001500359	Lower front crosspiece	1
	3029	672002000065	Tray assembly	1
	3032	673001700010	Tank band bracing block	2
	3033	672001500200	Lower rear crosspiece	1
	3034	672001500114	Middle rear crosspiece	1
	3035	673002200079	Measurable spoon	1
	3036	673001400110	Left claw	2
	3037	673001400109	Right claw	2
	3038	673001400107	Framework support	2
	3039	672001200004	Orientation pole	2
	3040	673001800356	Adjustable basket handle	2
	3041	672000801021	Slip bracket	2
	3043	673001000018	Upper basket wheel	4
	3048	672001100004	Adjust steel rope	2
	3049	672002300002	Adjust nut	2
	3050	673001300012	Top board hook	2
	3051	672001100003	Adjust screw	2
	3052	673001400146	Right adjuster holder assembly	1
	3053	672001400045	Front foot	2
	3055	672001100002	Adjustable pole	2
	3056	673001400145	Left adjuster holder assembly	1
	3057	672001400046	Back foot	2
	1010+1011+1013	673001490016	Float holder assembly	1
	1035+1047	673000900224	Softener pipe	2
	1071+1072	672000200054	Washing motor support	1
	3014+3015+3016	673002200080	Cutlery basket	1
	C5004	673006200004	Rinsing agent cup	1
	OTK 175	672000700004	OTK 175	2
	OTK 286	672000700003	OTK 286	1
	OTK 310	672000700001	OTK 310	7
	OTK 396	672000700007	OTK 396	2

WASHING MACHINE MLP-12I

no in EV	code	item	Qty
1001	673000900249	External pipe	1
1002	673001500005	O Ring I 31.5X3.55	2
1003	673001800364	Guide casing	1
1004	673001600021	External pipe nut	1
1005	673001900016	Water dispenser	1
1006	673000300067	Upper sprayer	1
1007	673000900195	Upper sprayer pipe	1
1012	673002300003	Float	1
1016	673002500047	Micro filter	1
1017	673001600022	Sump nut	1
1018	673001500016	Sump gasket	1
1019	673000700081	Sump	1
1020	672000700028	Clamp 12.7×1.8	1
1022	673000900073	PVC hose	1
1027	674000600106	Drain pump	1
1029	673002200043	Salt filler	1
1030	673002800050	Softener cover assembly	1
1031	673001700080	Softener cover gasket	1
1032	673001600039	Softener nut	1
1033	673001700001	Softener gasket	1
1034	674000700022	Softener	1
1036	672000700029	Clamp 14.5×1.8	3
1037	673006200027	Drain hose hook	1
1038	673001500002	Drain hose holder	1
1039	673000900186	Drain hose	1
1042	674000000198	Power cord	1
1043	674000200012	Inlet valve	1
1045	673000900093	Inlet hose assembly	1
1046	673000900026	Regeneration hose	1
1048	673000900024	Inlet hose of air breather	1
1051	673001600055	Air breather nut	1
1054	673002700008	Air breather assembly	1
1064	670400051614	Lower sprayer	1
1065	673001200027	Lower sprayer connection assembly	1
1070	674000600041	Washing pump	1
1073	673002400066	Motor insulation pan	1
1074	673000900182	Connect hose	2
1085	673001400025	Heating element support	1
1086	674001100039	Heating elements	1
1088	673001600024	Water inlet nut	1
1089	673001500019	Water inlet gasket	1
1091	673002600035	Water inlet	1
1093	674000900038	Sensing device	1
1100	673000900111	Bend connect hose A	1
1101	673000900112	Bend connect hose B	1
1102	674001010008	turbidity sensor	1
1113	673002500048	plane filter	1
1114	673001300137	Scran collection	1
1115	674000300079	Pressure switch	1
1116	673001400083	power cord clasper	1
1117	674000302006	pressure switch assembly for heating elements	1
2001	673002000042	Door edge guard piece	2
2002	672002200142	Inner door	1
2004	672001700002	Dispenser bracket	2
2005	674000800032	Dispenser	1
2006	674000100491	Wiring harness	1
2008	672000500006	Ring Φ6	4
2009	672001300029	Left hinge	1
2010	672001200012	Dowel	2
2011	672001300030	Right hinge	1
2012	672001300024	Door gemel assembly	1
2013	672000100008	Door spring	2
2017	672001800315	Outer door	1
2018	673000401751	Front panel	1
2023	673001800513	Handle assembly	1
2024	674010030000	door switch	1
2027	674010010000	Power switch	1
2034	674001020217	Control board	1
2040	673001800365	Screw sleeve	2
2041	673000700005	Sleeve cover	2
2042	673002400044	Lampshade A	1
2043	673002400045	Lampshade B	1
2053	673002800031	Control panel cover	1
2054	672000310034	Delay key-press	1
2070	673002400187	Circuit board box A	1
2071	673002400100	Circuit board box B	1
2950	673000800812	power button	1
2951	673000801572	Program selection key-press	1
2954	673000801576	Delay key-press	1
2957	673000801579	Half loading key-press	1
3001	672001600212	Left side panel	1
3003	672002100067	Upright left assembly	1
3005	672001500008	Upper rear crosspiece	1
3006	673001300061	door clamp	1
3007	672001400039	door lock	1
3009	672001500318	Upper front crosspiece	1
3010	673001700079	Tank gasket	1
3011	672002100066	Upright right assembly	1
3012	672001600211	Right panel	1
3013	673001300102	Upper basket cup holder	4
3017	672000800335	Lower basket	1
3018	672000800405	Upper basket	1
3021	673001300044	Rail block	2
3022	672001700005	Rail	1
3023	673001400056	Rail support assembly	4
3027	672001500303	Lower front crosspiece	1
3029	672002000066	Tray assembly	1
3032	673001700010	Tank band bracing block	2
3033	672001500202	Lower rear crosspiece	1
3034	672001500007	Middle rear crosspiece	1
3035	673002200079	Measurable spoon	1
3036	673001400110	Left claw	2
3037	673001400109	Right claw	2
3038	673001400107	Framework support	2
3039	672001200004	Orientation pole	2
3040	673001800356	Adjustable basket handle	2
3041	672000801021	Slip bracket	2
3043	673001000018	Upper basket wheel	4
3048	672001100004	Adjust steel rope	2
3049	672002300002	Adjust nut	2
3050	673001300012	Top board hook	2
3051	672001100003	Adjust screw	2
3052	673001400146	Right adjuster holder assembly	1
3053	672001400045	Front foot	2
3055	672001100002	Adjustable pole	2
3056	673001400145	Left adjuster holder assembly	1
3057	672001400046	Back foot	2
1010+1011+1013	673001490016	Float holder assembly	1
1035+1047	673000900224	Softener pipe	2
1071+1072	672000200054	Washing motor support	1
3014+3015+3016	673002200055	Cutlery basket	1
C5004	673006200004	Rinsing agent cup	1
OTK 175	672000700004	OTK 175	2
OTK 286	672000700003	OTK 286	1
OTK 310	672000700001	OTK 310	7
OTK 396	672000700007	OTK 396	2